THIS DRAWING IS UNPUBLISHED. RELEASED FOR PUBLICATION -,- .
© COPYRIGHT - BY TYCO ELECTRONICS CORPORATION. ALL RIGHTS RESERVED.

LOC	DIST
ES	00

REVISIONS

P	LTR	DESCRIPTION	DATE	DWN	APVD
	D	REVISED PER ECR-06-000966	17JAN06	L.Z	S.Y

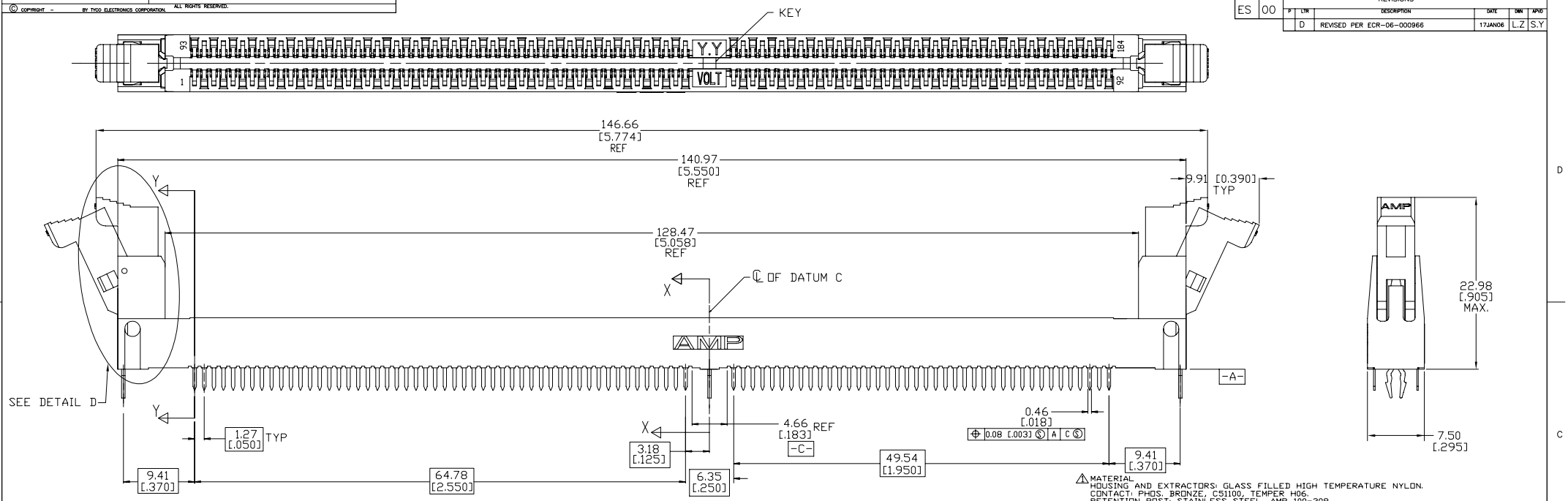

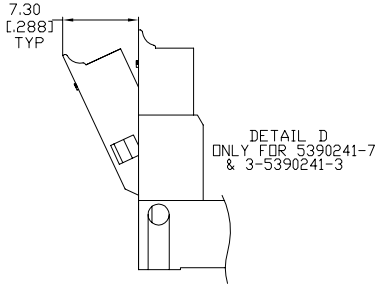

1. MATERIAL
HOUSING AND EXTRACTORS: GLASS FILLED HIGH TEMPERATURE NYLON.
CONTACT: PHOS. BRONZE, C51100, TEMPER H06.
RETENTION POST: STAINLESS STEEL, AMP 100-309.

2. FINISH
CONTACT:
NICKEL PLATE ALL OVER 0.00127-0.0019[.000050-.000075] THICK
PER AMP SPEC 112-25-2.
GOLD PLATE IN INTERFACE AREA 0.00038 [.000015] MIN THICK
PER AMP SPEC 112-162-5.
LEAD-FREE MATTE TIN PLATE IN SOLDERTAIL AREA .00381-.00635 [.000150-.000250] THICK
PER AMP SPEC 112-65-1.

3. PART NUMBER WILL NOT HAVE METAL RETENTION POSTS.

4. RETENTION POST: BRASS

~~5. EXTRACTOR MATERIAL: GLASS-FILLED HIGH TEMPERATURE NYLON, COLOR-BLACK.~~

6. GOLD PLATE IN INTERFACE AREA 0.00076 (.000030) MIN THICK PER AMP SPEC 112-162-5
OVER 0.00254 (.000100) MIN THICK NICKEL PER AMP SPEC 112-25-3.

~~7. HOUSING MATERIAL: GLASS FILLED HIGH TEMPERATURE NYLON, COLOR-BLUE.~~

8. PRELIMINARY - NOT RELEASED FOR PRODUCTION

9. GOLD PLATE IN INTERFACE AREA 0.00038 [.000015] MIN THICK PER AMP SPEC
112-162-5 OVER 0.00254 [.000100] MIN THICK NICKEL PER AMP SPEC 112-25-3
MATTE TIN IN SOLDERTAIL AREA .00381-.00635 [.000150-.000250] THICK PER
AMP SPEC 112-65-1 OVER 0.00127-.00510 [.000050-.000200] THICK NICKEL PER
AMP SPEC 112-25-3.

10. GOLD PLATE IN INTERFACE AREA 0.00038 [.000015] MIN THICK PER AMP SPEC
112-162-5 OVER 0.00127 MIN THICK NICKEL PER AMP SPEC 112-25-2
GOLD FLASH IN SOLDERTAIL AREA PER AMP SPEC 112-162-5 OVER
0.00127 THICK NICKEL PER AMP SPEC 112-25-2.

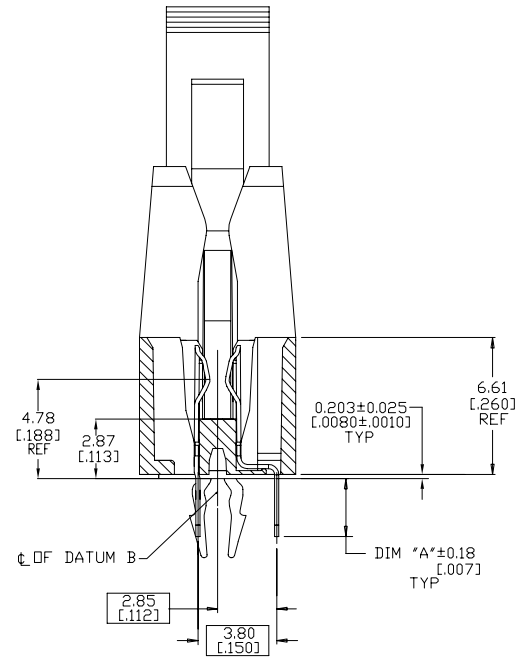

SECTION Y-Y
CIRCUITS 1 AND 93
SCALE 8:1

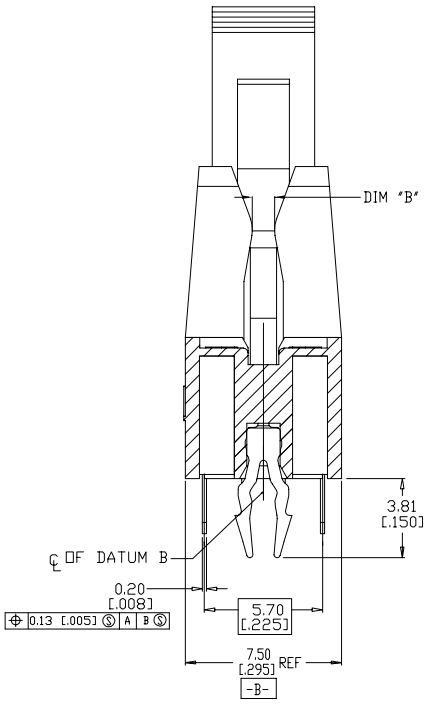

SECTION X-X
SCALE 8:1

NATURAL	BLUE	1.07 [.042]	2.79 [.110]	DETAIL B	184 POSN. DIMM2P , 2.5V, PRE-PLATED CONTACTS	9-5390241-1
BLACK	BLACK	1.07 [.042]	3.81 [.150]	DETAIL B	184 POSN. DIMM2P , 2.5V, POST-PLATE CONTACTS	8-5390241-2 △8
NATURAL	BLACK	1.07 [.042]	3.81 [.150]	DETAIL B	184 POSN. DIMM2P , 2.5V, POST-PLATE CONTACTS	8-5390241-1 △8
NATURAL	BLACK	1.07 [.042]	4.26 [.168]	DETAIL B	184 POSN. DIMM2P , 2.5V, 30 GOLD PLATED CONTACTS	6-5390241-1 △3 △6
NATURAL	BLACK	1.07 [.042]	2.79 [.110]	DETAIL B	184 POSN. DIMM2P , 2.5V, PRE-PLATED CONTACTS	3-5390241-3 △1
BLACK	BLACK	1.07 [.042]	2.79 [.110]	DETAIL A	184 POSN. DIMM2P , 1.8V, PRE-PLATED CONTACTS	1-5390241-2 △5
NATURAL	BLACK	1.07 [.042]	2.79 [.110]	DETAIL B	184 POSN. DIMM2P , 2.5V, TAIL GOLD FLASH CONTACTS	1-5390241-0 △10
BLACK	BLACK	1.07 [.042]	2.79 [.110]	DETAIL B	184 POSN. DIMM2P , 2.5V, PRE-PLATED CONTACTS	5390241-9
NATURAL	BLACK	1.47 [.058]	3.30 [.130]	DETAIL B	184 POSN. DIMM2P , 2.5V, PRE-PLATED CONTACTS	5390241-8
NATURAL	BLACK	1.07 [.042]	2.79 [.110]	DETAIL B	184 POSN. DIMM2P , 2.5V, PRE-PLATED CONTACTS	5390241-7 △1
NATURAL	BLACK	1.07 [.042]	2.79 [.110]	DETAIL B	184 POSN. DIMM2P , 2.5V, PRE-PLATED CONTACTS	5390241-6 △4
NATURAL	BLACK	1.47 [.058]	2.79 [.110]	DETAIL B	184 POSN. DIMM2P , 2.5V, PRE-PLATED CONTACTS	5390241-5
NATURAL	BLACK	1.07 [.042]	3.30 [.130]	DETAIL B	184 POSN. DIMM2P , 2.5V, PRE-PLATED CONTACTS	5390241-4
NATURAL	BLACK	1.07 [.042]	2.79 [.110]	DETAIL B	184 POSN. DIMM2P , 2.5V, PRE-PLATED CONTACTS	5390241-3 △1
NATURAL	BLACK	1.07 [.042]	2.79 [.110]	DETAIL A	184 POSN. DIMM2P , 1.8V, PRE-PLATED CONTACTS	5390241-2
NATURAL	BLACK	1.07 [.042]	2.79 [.110]	DETAIL B	184 POSN. DIMM2P , 2.5V, PRE-PLATED CONTACTS	5390241-1
EXTRACTOR COLOR	HOUSING COLOR	DIM "B"	SOLDERTAIL LENGTH DIM "A"	KEY POSITION	DESCRIPTION	PART NUMBER

THIS DRAWING IS A CONTROLLED DOCUMENT.

DIMENSIONS: MM [INCHES]

TOLERANCES UNLESS OTHERWISE SPECIFIED:
0 PLC ± –
1 PLC ± –
2 PLC ± 0.13 [.005]
3 PLC ± –
4 PLC ± –
ANGLES ± –

MATERIAL △1
FINISH △2

DWN	J.BURWELL	04JUNE04
CHK	D.SHIRLING	04JUNE04
APVD	D.SHIRLING	04JUNE04
PRODUCT SPEC	108-1753	
APPLICATION SPEC	114-1115	
WEIGHT	–	

Tyco Electronics Corporation
SH/CN GuiPingRD 668#

NAME: SOCKET ASSEMBLY, DIMM2P
184 POSITION, DDR
–

SIZE	CAGE CODE	DRAWING NO	RESTRICTED TO
A1	00779	C-5390241	–

CUSTOMER DRAWING | SCALE 4:1 | SHEET 1 OF 2 | REV D

THIS DRAWING IS UNPUBLISHED. RELEASED FOR PUBLICATION
© COPYRIGHT - BY TYCO ELECTRONICS CORPORATION. ALL RIGHTS RESERVED.

LOC	DIST
ES	00

REVISIONS

P	LTR	DESCRIPTION	DATE	DWN	APVD
	—	SEE SHEET 1	—	—	—

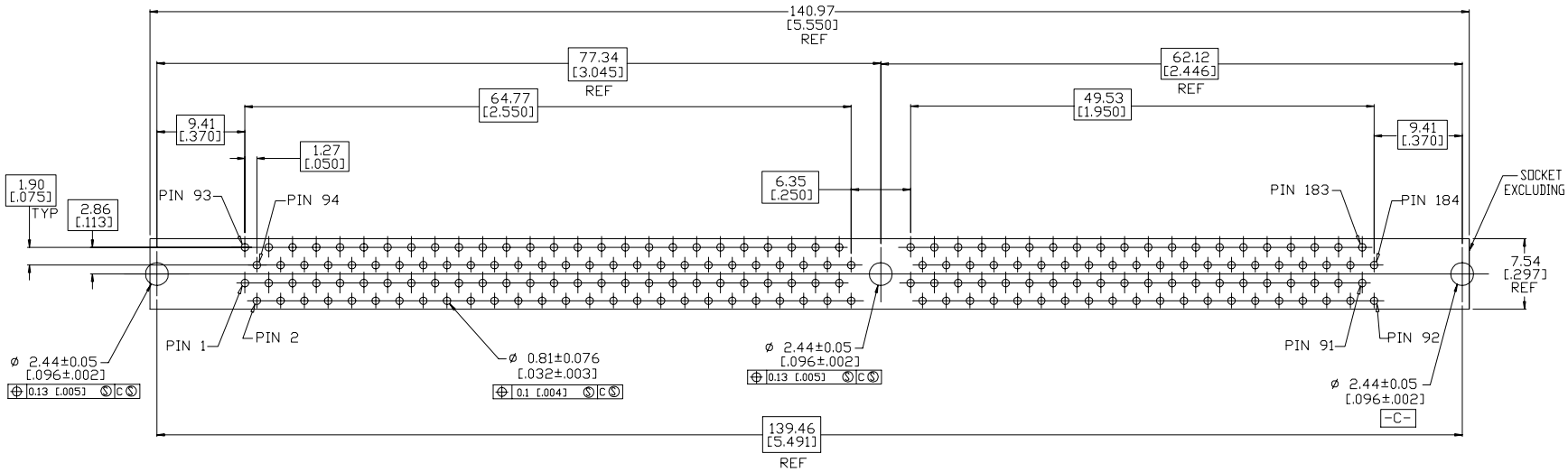

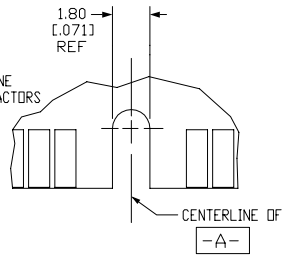

DETAIL A
SCALE 8:1

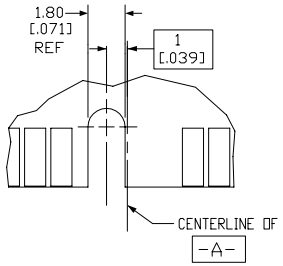

DETAIL B
SCALE 8:1

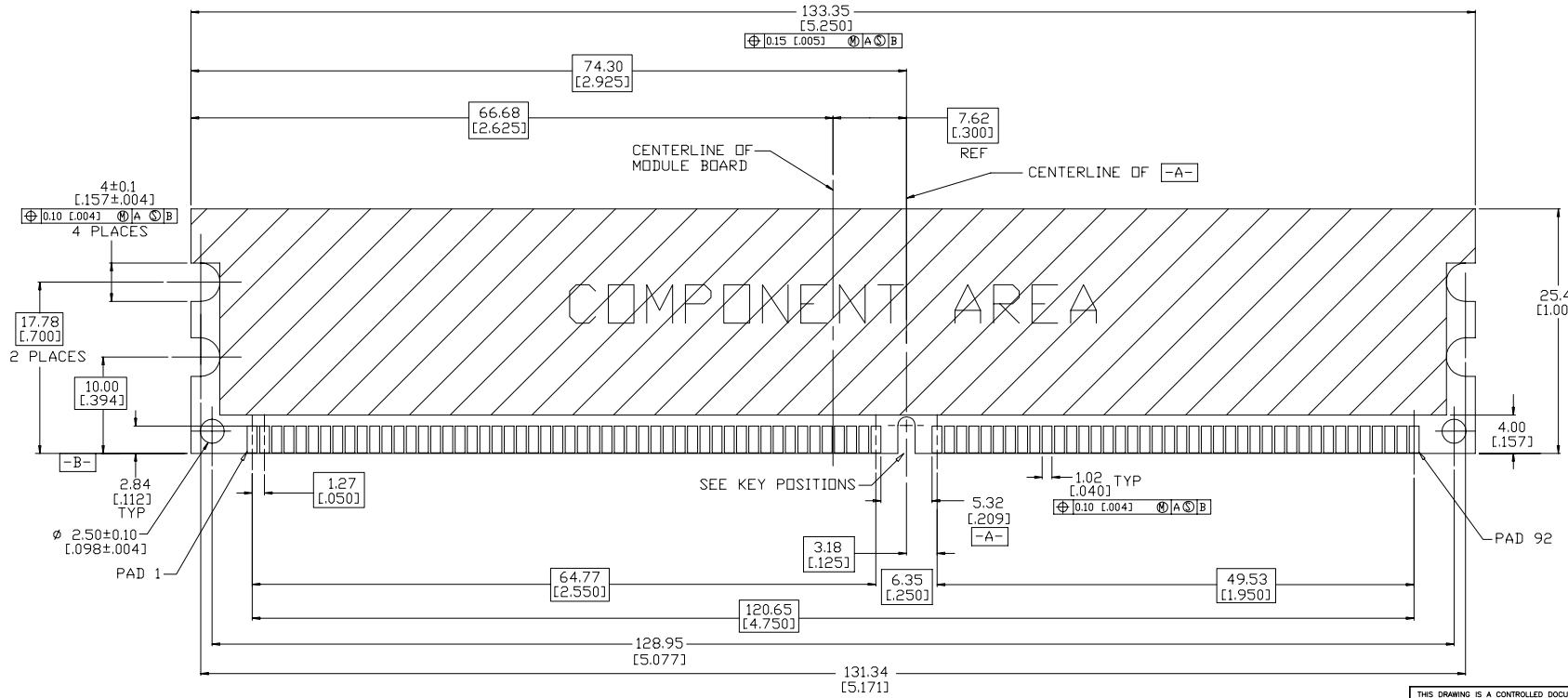

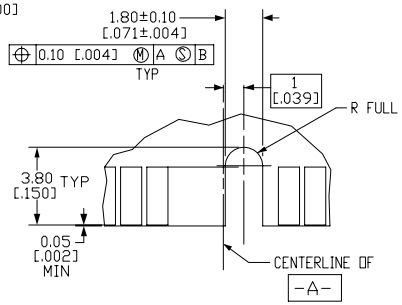

DETAIL C
SCALE 8:1

KEY POSITIONS

RECOMMENDED MODULE LAYOUT

SEE JEDEC SPEC MO-206 FOR COMPLETE MODULE DETAILS
1.27±0.10 [.050±.004] THICK ACROSS CONTACT PADS

THIS DRAWING IS A CONTROLLED DOCUMENT.

DIMENSIONS: MM [INCHES]

TOLERANCES UNLESS OTHERWISE SPECIFIED:
0 PLC ± –
1 PLC ± –
2 PLC ± 0.13 [.005]
3 PLC ± –
4 PLC ± –
ANGLES ± –

MATERIAL 1
FINISH 2

DWN	J.BURWELL	04JUNE04
CHK	D.SHIRLING	04JUNE04
APVD	D.SHIRLING	04JUNE04
PRODUCT SPEC	108-1753	
APPLICATION SPEC	114-1115	
WEIGHT	—	

Tyco Electronics Corporation
SH/CN GuiPingRD 668#

NAME: SOCKET ASSEMBLY, DIMM2P
184 POSITION, DDR

SIZE	CAGE CODE	DRAWING NO	RESTRICTED TO
A1	00779	C-5390241	—

CUSTOMER DRAWING | SCALE 1:1 | SHEET 2 OF 2 | REV D